1. Description

EDQ100 series is a new generation of DC-DC power module, industry standard Quarter brick package and applying advanced potting technology. Offers input voltage 24V, 28V, 36V and 48Vdc, output voltage from 3.3 to 48Vdc, max power 125W. Featured high reliability, high efficiency, different protections, etc. It is widely used in industrial, telecommunication, transportation and high reliability applications.

- Max 125W isolated output
- Input voltage range : 24,28,36,48Vdc
- Line regulation：±0.5%
- Load regulation：±1.0%
- Output trimming：±10%
- Input under voltage protection
- Output overvoltage protection
- Over temperature protection
- Disable/Enable control
- No minimum load required

2. Part Number（Figure 1）

Model	Input voltage range	Output voltage	Output current	Efficiency	Typical ripple noise
EDQ10028S3V3TP	9-36Vdc	3.3Vdc	27A	84%	100mV
EDQ10028S5TP	9-36Vdc	5Vdc	20A	85%	100mV
EDQ10028S12TP	9-36Vdc	12Vdc	8.33A	90%	200mV
EDQ10028S15TP	9-36Vdc	15Vdc	6.67A	89%	200mV
EDQ10028S24TP	9-36Vdc	24Vdc	4.16A	88%	500mV
EDQ10028S28TP	9-36Vdc	28Vdc	3.75A	88%	500mV
EDQ10028S48TP	9-36Vdc	48Vdc	2.08A	88%	500mV
EDQ10036S3V3TP	18-75Vdc	3.3Vdc	30A	86%	100mV
EDQ10036S5TP	18-75Vdc	5Vdc	20A	87%	100mV
EDQ10036S12TP	18-75Vdc	12Vdc	8.3A	89%	200mV
EDQ10036S15TP	18-75Vdc	15Vdc	6.67A	90%	200mV
EDQ10036S24TP	18-75Vdc	24Vdc	4.16A	88%	500mV
EDQ10036S28TP	18-75Vdc	28Vcd	3.57A	88%	500mV
EDQ10036S48TP	18-75Vdc	48Vdc	2.08A	88%	500mV
EDQ12524S3V3TP	18-36Vdc	3.3Vdc	30A	87%	100mV
EDQ12524S5TP	18-36Vdc	5Vdc	25A	89%	100mV
EDQ12524S12TP	18-36Vdc	12Vdc	10.4A	90%	200mV
EDQ12524S15TP	18-36Vdc	15Vdc	8.3A	89%	200mV
EDQ12524S24TP	18-36Vdc	24Vdc	5.2A	89%	500mV

EDQ12524S28TP	18-36Vdc	28Vdc	4.46A	89%	500mV
EDQ12524S48TP	18-36Vdc	48Vdc	2.6A	89%	500mV
EDQ12524S54TP	18-36Vdc	54Vdc	2.32A	89%	500mV
EDQ12548S3V3TP	36-75Vdc	3.3Vdc	30A	87%	100mV
EDQ12548S5TP	36-75Vdc	5Vdc	25A	90%	100mV
EDQ12548S12TP	36-75Vdc	12Vdc	10.4A	91%	200mV
EDQ12548S15TP	36-75Vdc	15Vdc	8.3A	91%	200mV
EDQ12548S24TP	36-75Vdc	24Vdc	5.2A	89%	500mV
EDQ12548S28TP	36-75Vdc	28Vdc	4.46A	89%	500mV
EDQ12548S48TP	36-75Vdc	48Vdc	2.6A	89%	500mV
EDQ12548S54TP	36-75Vdc	54Vdc	2.32A	89%	500mV

Remarks：1. Unless otherwise noted, all specifications are tested under 25℃, nominal input voltage and full load.
2. For other output voltages, please consult manufacturer.

Model number configuration

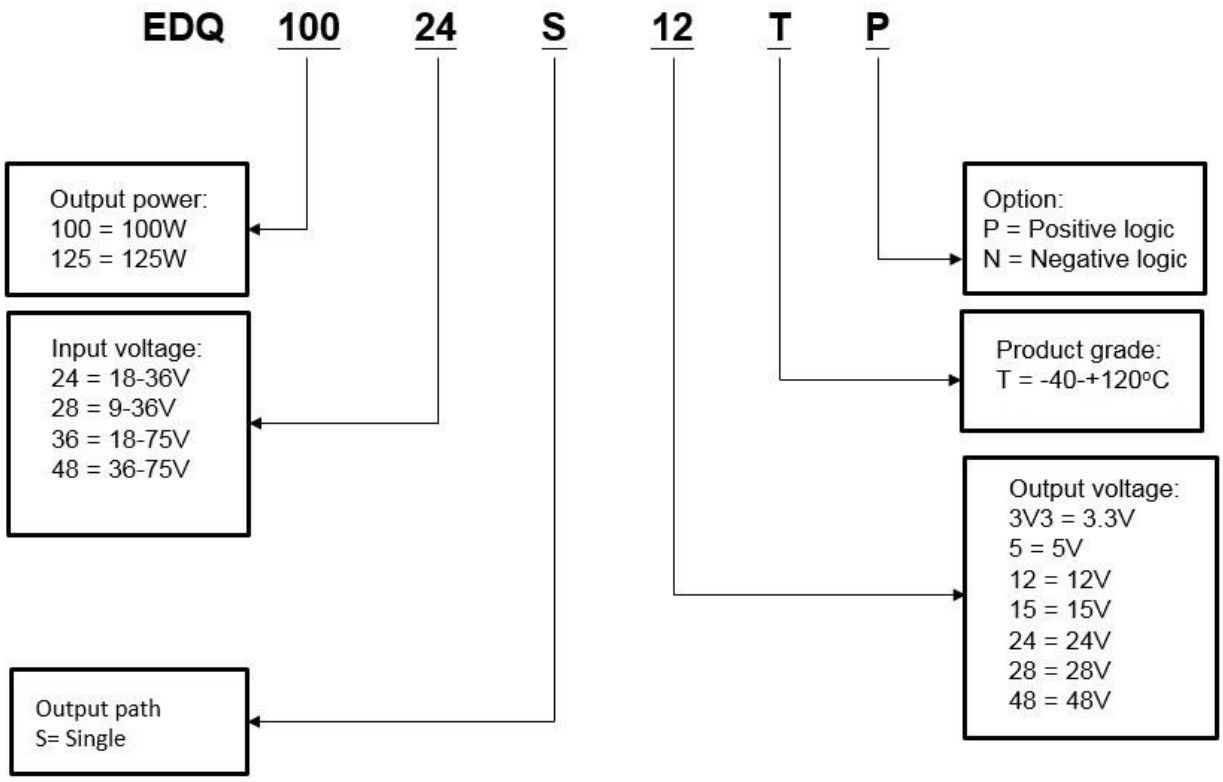

3. General Specifications

3.1 Input characteristics

Parameter		Min	Typical	Max	Unit	Remarks/Conditions
Input voltage range	24V	18	24	36	Vdc	
	28V	9	28	36	Vdc	
	48V	36	48	75	Vdc	
	36V	18	36	75	Vdc	
Input under-voltage Lockout	24V		15		Vdc	Turn on 10V
	28V		8		Vdc	Turn on 9V
	36V		16		Vdc	Turn on 18V
	48V		31		Vdc	Turn on 34V
Input voltage surge	24/28V			50	Vdc	100ms max
	36/48V			100	Vdc	100ms max
ON/OFF Remote control(Positive logic)			+2.5		Vdc	Or open circuit, normal output
			+0.8		Vdc	Or short circuit, no output

3.2 Output characteristics

Parameter	Min	Typical	Max	Unit	Remarks/Conditions
Output voltage setpoint			±1.5	%	At 25℃,line/load regulation within limit
Line regulation			±0.50	%	Full range, 100% load
Load regulation			±1.00	%	Typical input, 25-100% load
Output voltage trim range	-10		+10	%	Output power≤Max output power, Output current≤Max output current
Output over voltage protection	110		150	%Vout	Auto recovery
Ripple+noise（p-p）	Refer figure 1	Typical input, typical output, BW=20 MHz，Output parallel a 4.7μF ceramic cap and 10μF tantalum cap			Typical input, typical output, BW=20 MHz，Output parallel a 4.7μF ceramic cap and 10μF tantalum
Transient response		Single,25% step load change	500	μs	di/dt=100mA/1μs,Tc=25℃, load change=0.5 Io max to 0.75 Io max and 0.75 Io max to 0.5 Io max

3.3 Feature characteristics

Parameter	Min	Typical	Max	Unit	Remarks/Conditions
Switching frequency		330		KHz	Full range
Efficiency	Refer to figure 1				Typical input, typical output, Tc=25℃
Over temperature protection		120		℃	Non-latching shutdown protection, measured at baseplate
Over temperature recover			110	℃	Recover turn on
EMI/RFI	EN55022 level A/B (With external input filter)				

3.4 General characteristics

Parameter		Min	Typical	Max	Unit	Remarks/Conditions
Isolation voltage	Input to output		2250		Vdc	Relative humidity 90%， under standard atmospheric pressure， 500Vdc
Isolation resistance		100			MΩ	
MTBF			TBD		H	Typical input, typical output,Tc=25℃
Operating temperature		-40		+120	℃	T grade baseplate temperature
Storage temperature		-55		+125	℃	Ambient temperature
Relative humidity		5		95	%	Non-condensing
Storage humidity		5		95	%	Non-condensing
Dimension		51.91*36.8*12.7			mm	Length*width*height
Weight		50			g	

3.5 Mechanical drawing and pinouts (Unit in mm(in))

2 screw holes are for output voltage 24-54V

4 screw holes are for output voltage 3.3-15V

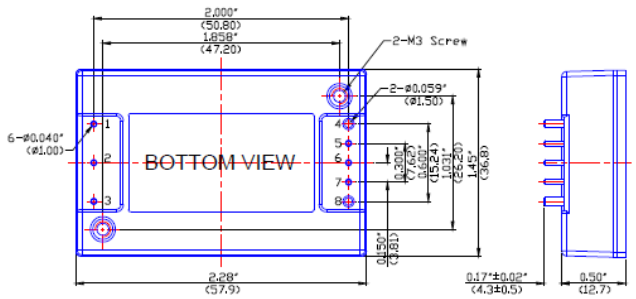

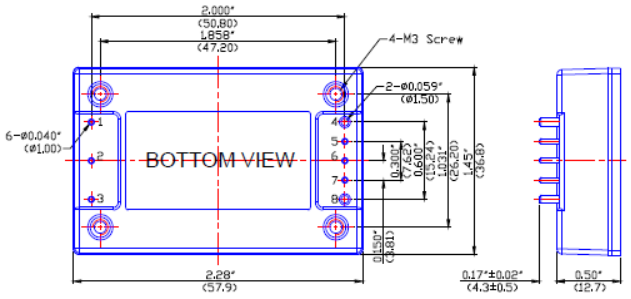

Remarks:

1. Baseplate materials: Aluminum + plastic case
2. Pins 1-3/5-7 ∅1.0mm(0.04in)
3. Other pins ∅1.5mm(0.059in)
4. No individual tolerance： x.xx = ±0.04in (±1.0mm), x.xxx = ±0.010in (±0.25mm)

Pin assignment

Pin no.	Label	Function
1	-Vin	Input voltage (-)
2	On/Off	ON/OFF remote control
3	+Vin	Input voltage (+)
4	-Vout	Output voltage (-)
5	-Vsense	Remote sense (-)
6	Trim	Output voltage trim pin
7	+Vsense	Remote sense (+)
8	+Vout	Output voltage (+)

NOTE: If remote sensing not utilized, output sense pin must be jumped to respective output power pins, for normal operation connect Pin NO.4 to Pin NO.5 and Pin NO.7 to Pin NO.8.